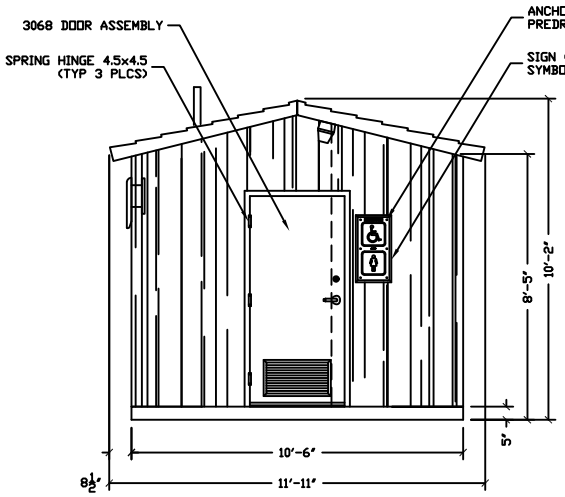

LEFT SIDE ELEVATION

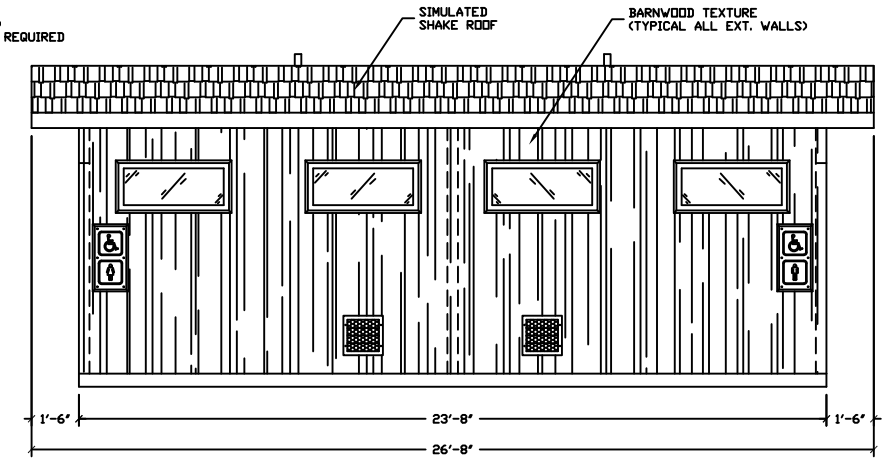

FRONT ELEVATION

FOR REFERENCE ONLY

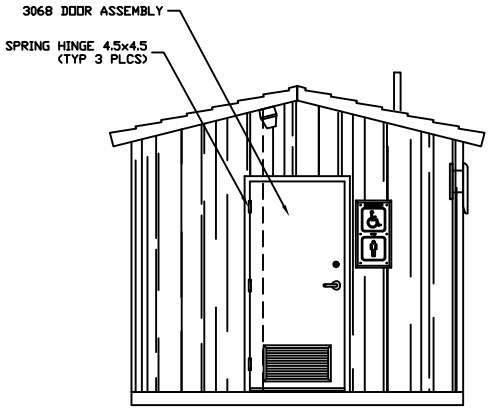

RIGHT SIDE ELEVATION

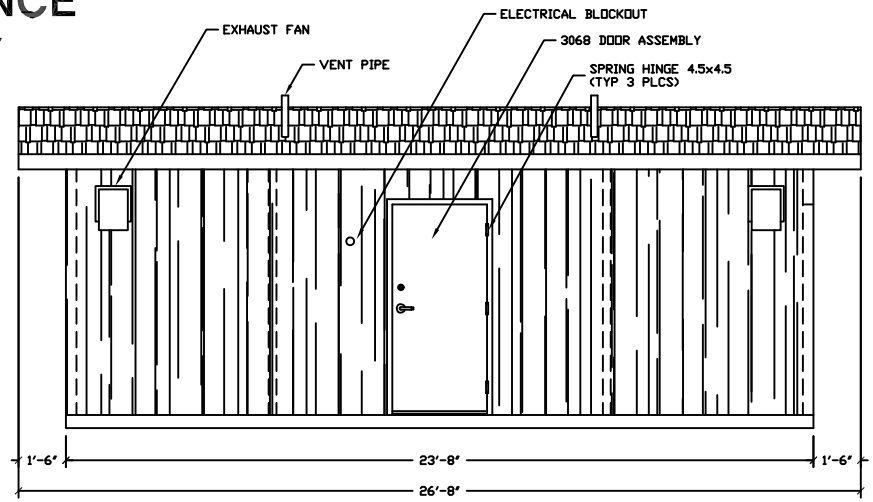

BACK ELEVATION

EMBEDDED MATERIALS

ITEM	QTY	ITEM	QTY
SI-2	4		
ANCHOR NAIL 1/4x3/4	24		
3068 DOOR ASSEMBLY	3		
SPRING HINGE 4.5x4.5	9		

CU. FT. CONC.	SQ. FT. MASF.	APPROXIMATE WEIGHT

3808 N. Sullivan Bldg. #7 Spokane, WA 99216

CXT Precast Products

901 N. Highway 77 Hillsboro, TX 76645

PROJECT TITLE

KODIAK

CXT STANDARD BUILDING

NOTICE

The information contained herein is proprietary and the exclusive property of CXT Incorporated. The information may only be used by the original recipient for the purpose intended. Reproduction or distribution of this information is strictly prohibited without the prior written consent of CXT Incorporated. By allowing use of this information, CXT Incorporated grants no warranty, express or implied, including a warranty of merchantability or of fitness for a particular purpose.

CXT Incorporated

REV.	DESCRIPTION	APPROVAL	DATE

SCALE	1/4"=1'-0"	DATE	04-11-08
DRAWN	D BRESSLER	FILE NO.	PD-KD02
CHECKED		PLOT	48

BUILDING ELEVATIONS

DWG NO.	SHEET	REV.
KD-02		

FOR REFERENCE ONLY

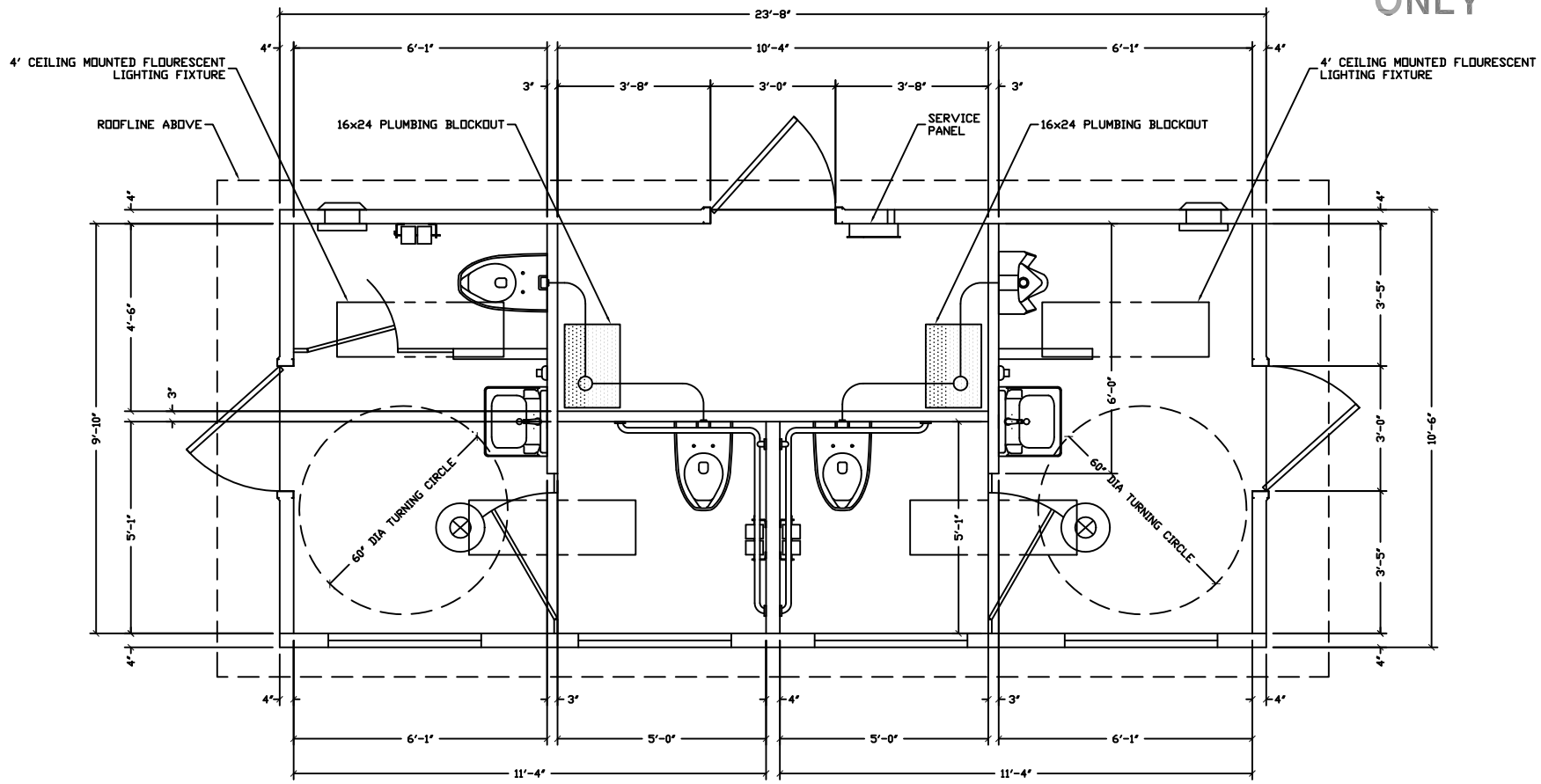

FLOOR PLAN

3808 N. Sullivan Bldg. #7 Spokane, WA 99216

CXT

Precast Products

901 N. Highway 77 Hillsboro, TX 76645

PROJECT TITLE

KODIAK

CXT STANDARD BUILDING

NOTICE

The information contained herein is proprietary and the exclusive property of CXT Incorporated. The information may only be used by the original recipient for the purpose intended. Reproduction or distribution of this information is strictly prohibited without the prior written consent of CXT Incorporated. By allowing use of this information, CXT Incorporated grants no warranty, express or implied, including a warranty of merchantability or of fitness for a particular purpose.

CXT Incorporated

REV.	DESCRIPTION	APPROVAL	DATE
SCALE	3/8"=1'-0"	DATE	04-11-08
DRAWN	D BRESSLER	FILE NO.	PD-KD03
CHECKED		PLOT	32

FLOOR PLAN

DWG NO.	SHEET	REV.
KD-03		

FOR REFERENCE ONLY

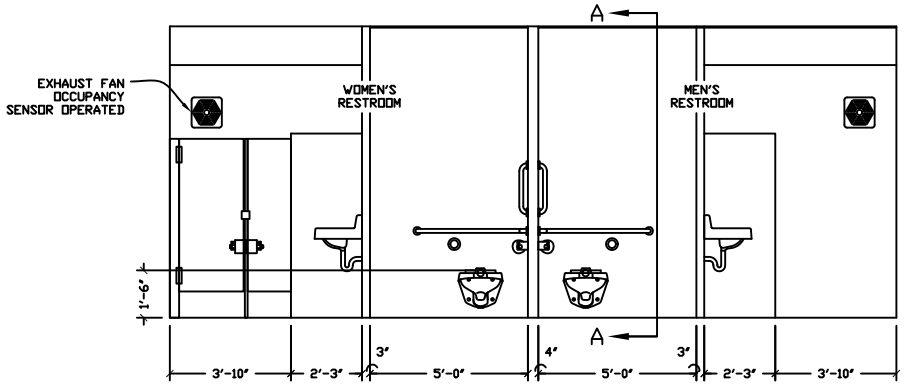

INTERIOR ELEVATION

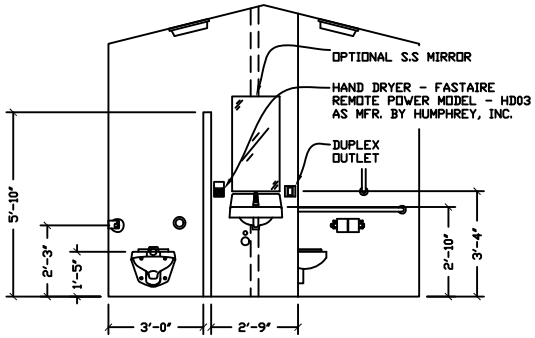

INTERIOR ELEVATION – WOMEN'S RESTROOM
MEN'S OPPOSITE

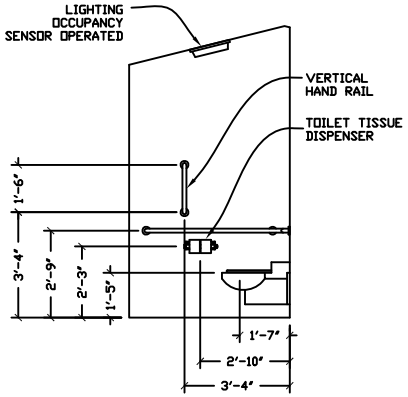

SECTION VIEW A–A – MEN'S RESTROOM
WOMEN'S OPPOSITE

3808 N. Sullivan Bldg. #7 Spokane, WA 99216

Precast Products

901 N. Highway 77 Hillsboro, TX 76645

PROJECT TITLE
KODIAK
CXT STANDARD BUILDING

NOTICE

The information contained herein is proprietary and the exclusive property of CXT Incorporated. The information may only be used by the original recipient for the purpose intended. Reproduction or distribution of this information is strictly prohibited without the prior written consent of CXT Incorporated. By allowing use of this information, CXT Incorporated grants no warranty, express or implied, including a warranty of merchantability or of fitness for a particular purpose.

CXT Incorporated

REV.	DESCRIPTION	APPROVAL	DATE

SCALE	1/4"=1'-0"	DATE	04-11-08
DRAWN	D BRESSLER	FILE NO.	PD-KD04
CHECKED		PLOT	48

INTERIOR ELEVATIONS

DWG NO.	SHEET	REV.
KD-04		